AudioCodes VoIP Processor Solutions Guide

The Clear Sound of Quality

Featuring Rich VoIP Processor Solutions
from the world's leading enabler of the new voice infrastructure

AudioCodes

HD VoIP Sounds Better

Solution Guide

Application	Solution	Processor Product Number	Number of Compressed VoIP Channels	Number of Data Ports	Product Description	Remarks	Page
IP Phones	**AC494 IP Phone VoIP Toolkit**	AC494 AC495 AC495L	2	2	Hardware & Software Reference Design Linux support IP Phone SIP demo application	IP Phone solution available	4 - 5
	Orchid IP Phone Toolkit	AC494E AC495E	2	2	Hardware & Software Reference Design Gigabit Eth support Linux support IP Phone SIP demo application	IP Phone solution available	6 - 7
Analog Telephone Adapter (ATA)	**AC496 ATA/CPE Gateway VoIP Toolkit**	AC496	Up to 8	2	Hardware & Software Reference Design Linux support ATA SIP demo application FXS/FXO support		8 - 9
	AC496 Tulip Tulip - 2 ATA	AC496	Up to 8	2	Production ready module Production files available Complete ATA SIP application FXS/FXO support	Optional customization of the software	8 - 9
	CPE VoIP Toolkit	AC488 AC483	2	-	Hardware & Software Reference Design Linux support ATA SIP demo application FXS/FXO support		10 - 11
CPE VoIP Gateway	**AC496 ATA/CPE Gateway VoIP Toolkit**	AC496	Up to 8	2	Hardware & Software Reference Design Linux support ATA SIP demo application FXS/FXO support		8 - 9
	AC496 Tulip ATA	AC496	Up to 4	2	Production ready module Production files available Complete ATA SIP application FXS/FXO support	Optional customization of the software	8 - 9
	AC48x VoIP DSP	AC48X	Up to 4	-	API Drivers OS independent		16
VoIP Enabled WiMAX CPE	**CPE VoIP Toolkit - WiMAX**	AC488 AC483	2, 4	-	Hardware & Software Reference Design Linux support ATA SIP demo application FXS support	A complete solution is available together with selected WiMAXchip vendors	10 - 11

Application	Solution	Processor Product Number	Number of Compressed VoIP Channels	Number of Data Ports	Product Description	Remarks	Page
VoIP Enabled ONU	**CPE VoIP Toolkit - GPON ONU**	AC488 AC483	2, 4	-	Hardware & Software Reference Design Linux support ATA SIP demo application FXS support	A complete solution is available together with selected GPON chip vendors	10 - 11
	CPE VoIP Toolkit - EPON (GE-PON) ONU	AC488 AC483	2, 4	-	Hardware & Software Reference Design Linux support ATA SIP demo application FXS support	A complete solution is available together with selected EPON chip vendors	10 - 11
SOHO/SMB VoIP Gateway	**SMB VoIP Toolkit - Gateway**	AC494E + AC498	4 - 16	2	Hardware & Software Reference Design Linux support 16 port Gateway SIP demo application FXS/FXO support	Scalable Solution	12 - 13
	Voice Over Packet Processor	AC490	8 - 12	-	Hardware Reference Design API Drivers OS independent	20 non-compressed channels per chip are available	17
	Voice Over Packet Processor	AC501x	8 - 24	-	Hardware Reference Design API Drivers OS independent		18
SMB IP-PBX	**Risk Free IP-PBX Toolkit**	AC494E+ AC498	4 - 16	2	Hardware & Software Reference Design Gigabit Eth support Linux support 16 port Gateway SIP demo application IP PBX Application FXS/FXO support		14 - 15
	Voice Over Packet Processor	AC490X	8 - 12	-	Hardware Reference Design API Drivers OS independent	20 non-compressed channels per chip are available	17
	Voice Over Packet Processor	AC501x	8 - 24	-	Hardware Reference Design API Drivers OS independent		18
Enterprise VoIP Gateway	**Voice Over Packet Processor**	AC491/ AC491L	32, 64, 96	-	Hardware Reference Design API Drivers OS independent	192 non-compressed channels per chip are available	19
	Voice Over Packet Processor	AC503x	128, 240*, 256* *Road Map	-	Hardware Reference Design API Drivers OS independent		20

AC494 IP Phone Toolkit

- Single chip complete IP Phone solution
- Superior voice quality at a competitive price
- Field-proven VoIP processor and software
- VoIPerfectHD™ (High Definition VoIP) support
- Combined hardware & software reference design
- Ready to use IP Phone open platforms

The AC494 IP Phone Toolkit is a combined hardware and software IP Phone reference design based on the AC494 System on Chip (SoC) family. AudioCodes' AC494 SoC (System on Chip) family provides IP Phone developers and manufacturers with a single chip field-proven complete IP Phone solution, integrated with superior voice quality at a competitive price.

AC494 SoC (System on Chip)

In a single chip, the AC494 combines all IP Phone components; including a MIPS 4KEC CPU, AC49x DSP and a 3-port Ethernet Switch (MACs and PHYs) together with a rich set of peripherals such as internal CODECS and serial ports. The AC494 is based on the VoIPerfectHD™ architecture (High Definition VoIP) support, AudioCodes' underlying, best-of-breed, core media gateway technology for its product line. Utilizing its highly integrated structure and requiring only a minimal number of peripheral devices, time to market is rapid with little risk.

Several silicon derivatives of this family allow cost optimization per application, which includes the following devices: AC494, AC495, AC496 and AC495L.

Device	CPU Clock	DSP Clock	USB	Voice CODECs	Eth. Ports
AC494	165 Mhz	125 Mhz	V	2	2
AC495	125 Mhz	100 Mhz	-	2	2
AC495L	87.5 Mhz	87.5 Mhz	-	2	2
AC496	165Mhz	125Mhz	-	2	2

Channel Density
- 2 VoIP line support

Hardware
- CPU – MIPS32 4KEC, 165 Mhz
- DSP – AC49x, 125 Mhz
- 2 Integrated 10/100 Base-T MAC/PHY ports
- Integrated 3-port layer-2 Ethernet Switch
- 8x8 Keypad interface
- LCD Interface – Alphanumeric, Graphic, Rasterized
- Integrated SSP (SPI/I2C) Controller
- USB 1.1 Host/Device
- External Memory I/F – Two SDRAM banks, up to 128 MB, Flash up to 32 MB
- Telephony Interface - Integrated dual channel 16 bit CODEC, sampling rate 8/16 KHz
- Five inputs to ADC, four outputs from DAC
- PCM Interface - 2.048 MHz A/µ-Law serial port
- Power Supply - +3.3V (+1.5V core via integrated voltage regulator)
- Power Consumption - 1.88 W (max)
- Operational Case Temperature Range - 0ºC - 70ºC (commercial)
- Package - 324 pin BGA, 23x23 mm, 1.00 mm ball spacing

Telephony Signaling
- DTMF – TIA464B
- Programmable Call-Progress Tones

VoIP Signaling Protocols
- SIP - RFC 3261, 3262, 3263, 3264, 2327

Packetization
- RTP/RTCP Packetization – RFC 3550, 3551, 2198
- DTMF Relay - RFC 2833, RFC 4733

Security
- SRTP (Secured RTP) per RFC 3711, 128 bit AES, HMAC SHA1

Media Processing
- Voice Coders - G.711, G.723.1, G.729A/B, G.726, GSM FR, iLBC
- Wideband Coders – G.722, G.722.2 (WB-AMR), G.711.1
- Echo Cancelation – G.168-2004 compliant, 64 msec tail length
- Acoustic Echo Canceler
- Silence Suppression – VAD, CNG
- Adaptive Jitter Buffer 300 msec

Telephony Features
- 3-Way conferencing (on each channel)
- Call Forward
- Call Hold
- Call Transfer
- Call Waiting

Configuration/Management
- Embedded Web
- TFTP
- FTP
- Telnet
- Filesystem Support

Operating System
- Linux Kernel
- Board Support Package

Low end IP Phone design with AC495L

The AC495L System on Chip, based on AudioCodes VoIPerfectHD™ architecture, provides Low end IP Phone manufacturers a complete IP Phone solution with low cost BOM.

IP Phone Toolkit Hardware Design

The AC494 IP Phone Toolkit hardware reference design includes all the peripherals for a complete high-end IP Phone. The AC494 SOC includes the internal interfaces for LCD Display, a keypad, USB, speaker and handset. Additionally, it has a 3-port E-switch and internal MACs/PHYs.

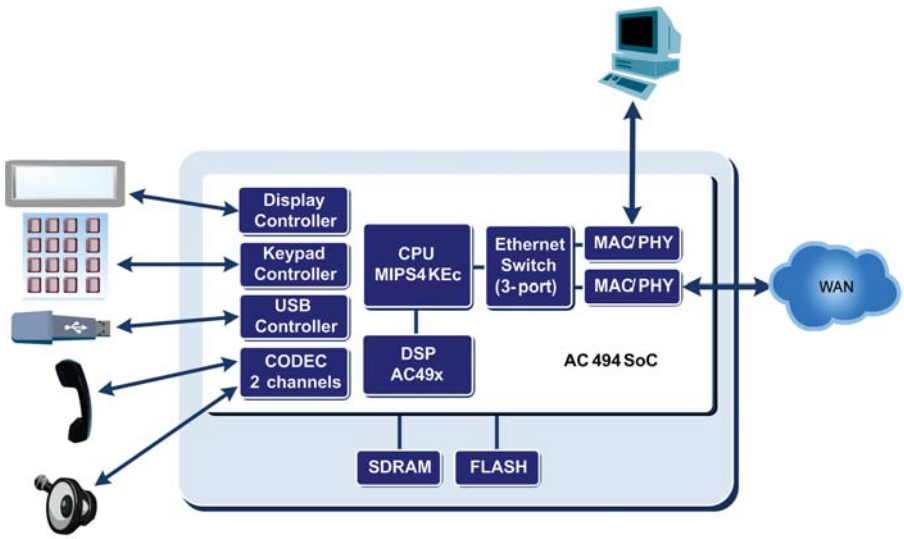

IP Phone Toolkit Hardware Design

IP Phone Software Development Kit (SDK)

The AC494 IP Phone Toolkit includes a complete Linux Software Development Kit (SDK) supporting voice and network protocols. The software is available in open source code, comprised of separate modules allowing for maximum customization.

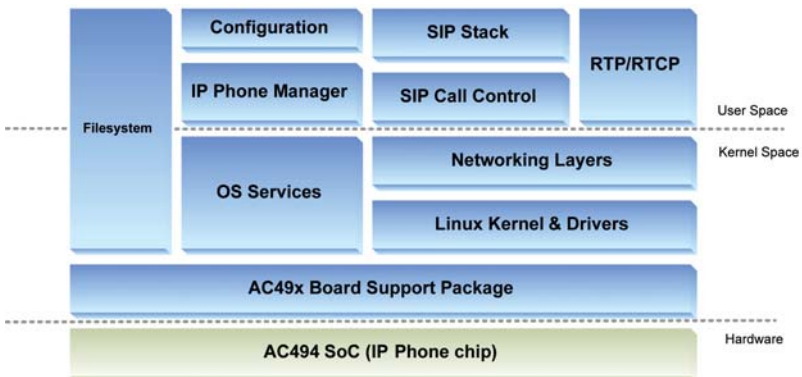

IP Phone Software Architecture

Ready to use IP Phones for developers

The AC494 IP Phone toolkit is also available on ready-to-use IP Phones. This allows OEMs and ODMs to develop their software on an actual IP Phone platform.

Toolkit Contents

- Reference & Development IP Phone Platform
- Linux Operating System (Kernel 2.6)
- Free Development Environment (Linux Tool-chain)
- Ready-to-use IP Phone Application (open source code)

AC494 IP Phone

Orchid System on Chip (SoC) Featuring AC494E/AC495E

- High Performance VoIP System on Chip Family
- Suitable for IP-Phones, Gateways and IP-PBX solutions
- Gigabit Ethernet throughput
- Security accelerator
- Static packet filtering
- Enhanced integrated CPU and DSP
- VoIPerfectHD™ (High Definition Voice) Support
- Combined hardware and software reference designs and toolkits

Orchid Development Toolkit

The Orchid family is the next-generation AudioCodes System on Chip (SoC) devices that integrates Gigabit Ethernet, security capabilities and superior voice quality features, and it combines the AC494E, AC495E and the AC496D devices.

The Orchid devices are dual-core based on MIPS 24KEc RISC CPU at 300MHz and AC49x-DSP at 150MHz allowing ODMs and OEMs to develop IP Phones, Gateways and IP-PBX with enhanced data and voice performance. These devices are based on VoIPerfectHD™ architecture (High Definition voice support), AudioCodes' underlying, best-of-breed, core media gateway technology for all of its products.

Gigabit Ethernet Support

The Orchid devices integrates a gigabit Ethernet (10/100/1000 Mbps) switch and two Fast Ethernet (10/100 Mbps) transceivers, allowing for the optional development of traditional Fast Ethernet designs without the additional cost of adding external transceivers.

The two Ethernet MACs support a high-speed and flexible switching mechanism allowing connection to PCs and/or a local area network (LAN) via three Gigabit Ethernet ports. The Orchid devices also integrated with two 10/100 Ethernet PHYs, enabling developers to design a cost effective product when gigabit technology is not required.

Security Capabilities

The Orchid devices are integrated with hardware accelerators that eliminate possible latencies, ensuring transparency to users. The Security Accelerator engine speeds processing of a variety of security algorithms. These include AES, DES, and 3DES encryption, SHA1 and MD5 authentication, Public Key Acceleration (PKA), and Random Number Generation (RNG). In addition, these devices feature a static packet filter for protection against Denialof- Service (DoS) attacks.

Development Toolkits

The Orchid devices are available with toolkits combining software and hardware reference designs allowing the ODMs and OEMs to reduce system design times. The toolkits hardware include Monochrome and Color LCD support, Keypad support, Wideband support (handset, headset and spk/mic), LAN and PC Gigabit ports and optional Bluetooth and USB support. The Software includes AudioCodes VoIPerfectHD™ package, SIP stack and call control. The toolkits couples the hardware with a complete Linux software suite supporting voice and network protocols, call features and management applications. This software is available in source code allowing customers to easily differentiate themselves.

IP Phones

SOHO / SMB VoIP Gateway

SMB IP-PBX

AC494E

The AC494E combines is a single chip all the IP-Phone components; it includes a MIPS 24KEc CPU, AC49x DSP and 3-port gigabit Ethernet Switch together with a set of peripherals such as internal CODECs and serial ports, on-chip peripherals include a 24-bit color LCD controller, 8 x 8 keypad interface, USB controller and two serial UARTs.

AC494E IP Phone Reference Design

- 10/100/1000 Eth interfaces
- Security Accelerator Engine
- High resolution 24 bit LCD
- HD VoIP support
- Bluetooth and USB accessories support

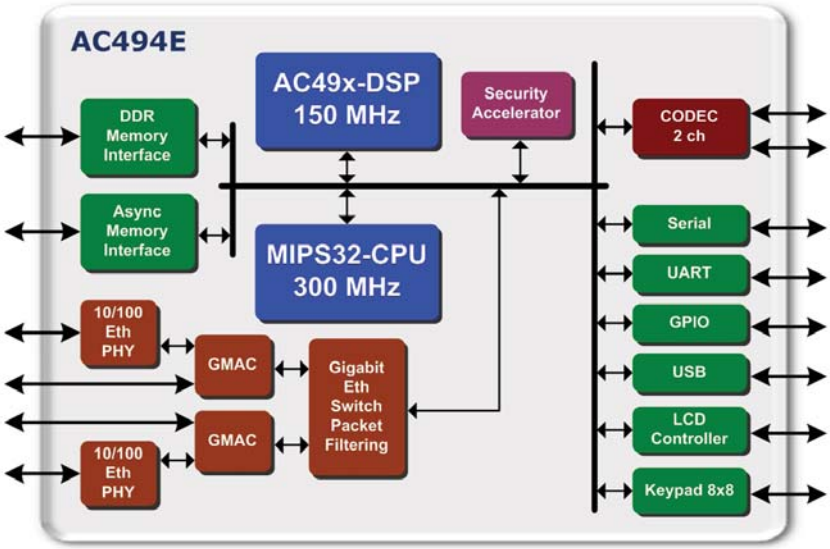

AC494E SoC Block Diagram

AC495E

The AC495E combines is a single chip the main Gateway/IP-PBX components; it includes a MIPS 24KEc CPU, AC49x DSP and 3-port gigabit Ethernet Switch together with a set of peripherals. The AC495E is integrated with PCM (TDM) interfaces allowing connecting it with analog devices such as FXS, FXO and BRI. The AC49x-DSP integrated inside the AC495E can support up to 4 VoIP channels and together with the VLYNQ high speed serial interface extra AC498-DSP devices can be added with support up to 16 VoIP channels.

AC495E GW/IPPBX Reference Design

- 10/100Mbytes & 1 Gbyte Ethernet Interfaces
- Security Accelerator Engine
- Integrated 300 MHz CPU for IP-PBX applications
- USB and SD Storage support
- Up to 16 FXS/FXO/BRI configurable ports support
- HD VoIP support
- Embedded Asterisk IP-PBX application is available

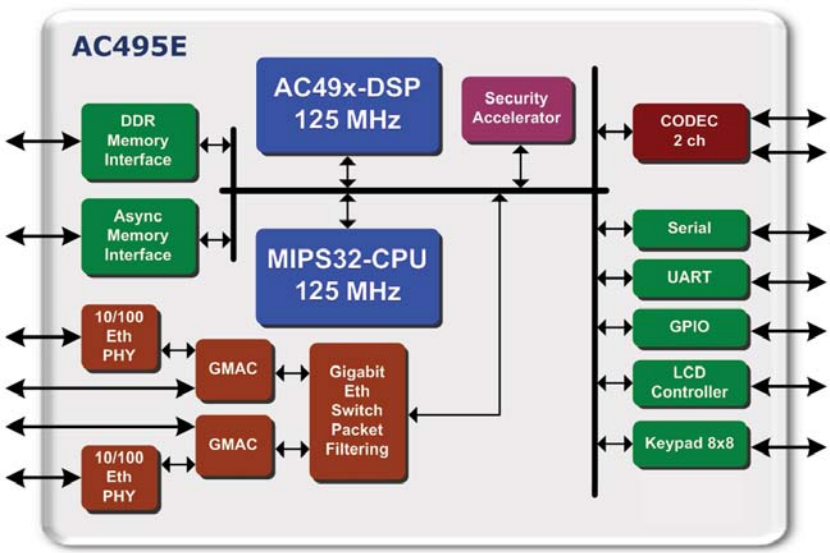

AC495E SoC Block Diagram

AC496 ATA/CPE Gateway VoIP Toolkit

- Complete ATA/CPE Gateway VoIP solution
- Up to 4 FXS/FXO line interfaces with assembly options
- 3-Way conferencing per line support
- VoIPerfectHD™ (High Definition VoIP) support, enabling superior voice quality at a competitive price
- Field-proven VoIP processor and software
- Perfect platform for stand-alone ATA developers
- Production Ready Hardware and Software Reference

The AC496 ATA Toolkit is a combined hardware and software ATA reference design based on the AC496 System on Chip (SoC). The AC496 SoC (System on Chip) provides ATA developers and manufacturers with single chip field-proven complete ATA solution, integrated with superior voice quality at a competitive price.

AC496 SoC (System on Chip)

In a single chip, the AC496 combines the main ATA components; including a MIPS 4KEC CPU, AC49x DSP and a 3-port Ethernet Switch (MACs and PHYs) together with a rich set of peripherals. The AC496 is based on the VoIPerfectHD™ architecture (High Definition VoIP) support, AudioCodes' underlying, best-of-breed, core media gateway technology for its product line. Utilizing its highly integrated structure and requiring only a minimal number of peripheral devices, time to market is rapid with little risk.

Channel Density
- Up to 4 FXS/FXO line interfaces

Hardware
- CPU – MIPS32 4KEC, 165 Mhz
- DSP – AC49x, 125 Mhz
- 2 Integrated 10/100 Base-T MAC/PHY ports
- Integrated 3-port layer-2 Ethernet Switch
- Integrated SSP (SPI/I2C) Controller

Telephony Signaling
- DTMF – Detection and Generation, TIA464B
- Caller ID – Telcordia/ETSI/NTT Type I/II (on hook/off hook)
- Programmable Call-Progress Tones

Packetization
- RTP/RTCP Packetization – RFC 3550, 3551, 2198
- DTMF Relay - RFC 2833

Security
- SRTP (Secured RTP) per RFC 3711, 128 bit AES, HMAC SHA1

Telephony Support
- FXS and FXO supported

Media Processing
- Voice Coders - G.711, G.723.1, G.729A/B, G.726, GSM FR, iLBC
- Wideband Coders – G.722, G.722.2 (WB-AMR), G.711.1
- Fax – T.38 Relay, Bypass , T.38 over RTP
- Echo Cancelation – G.168-2004 compliant, 64 msec tail length
- Silence Suppression – VAD, CNG
- Adaptive Jitter Buffer 300 msec

Telephony Features
- 3-Way conferencing (on each line)
- Call Forward
- Call Hold
- Call Transfer
- Call Waiting

Data Protocols
- IPv4, TCP, UDP, ICMP, ARP
- PPPoE
- Layer 2 switching
- DHCP Client/Server – RFC 2132
- WAN to LAN Layer-3 routing
- DHCP Client/Server – RFC 2132
- NAT – RFC3022, Application Layer Gateway (ALG)
- IEEE 802.1p/q QoS (VLAN tagging)

VoIP Signaling Protocols
- SIP - RFC 3261, 3262, 3263, 3264, 2327

Configuration/Management
- Embedded Web
- TFTP
- FTP
- Telnet
- Filesystem support

Operating System
- Linux Kernel
- Board Support Package

Analog Telephone Adapters (ATA)

CPE VoIP Gateway

Development Platform and Reference Design

The AC496 ATA VoIP Toolkit is a combined hardware and software ATA reference design. The AC496 ATA VoIP Toolkit is based on the AC496 System on Chip (SoC) family. In a single chip, the AC496 combines the main ATA components, inlcuding a MIPS 4KEC CPU, AC49x DSP and 2-ports MACs/PHYs together with a rich set of peripherals. The hardware reference design includes the AC496 and FXS and FXO modules.

ATA Software Development Kit (SDK)

The AC496 ATA VoIP Toolkit couples the hardware with a complete Linux software suite supporting voice and network protocols, call features and management applications. The software is available in open source code and consists of separate modules which allow customers to easily differentiate themselves.

Toolkit Contents

- Reference Design & Development Platform based on AC496-SoC
- Ready-to-use scalable ATA modules
- Linux Operating System (Kernel 2.6)
- Free Development Environment (Linux Tool-chain)
- Ready to use VoIP ATA Application (open source code)

AC496 Tulip ATA/AC496 Tulip 2

The AC496 Tulip and AC496 Tulip-2 are complete, ready to-use reference designs of an ATA and Gateway with data routing capabilities. The AC496 Tulip supports two FXS/FXO ports and the AC496 Tulip-2 supports four FXS/FXO ports. AudioCodes field-proven VoIPerfectHD™ DSP software and the integrated AC496 System on Chip (SoC), the AC496 Tulip and AC496 Tulip-2 offer OEMs and ODMs an excellent and cost-effective solution for the rapidly growing residential and Small Office/Home Office (SOHO) VoIP market.

The AC496 Tulip and AC496 Tulip-2 have a cost-effective Bill of Materials (BOM) to support aggressive market cost demands. An additional data port provides the option to convert a PC to the ATA without supplementary hardware. Special attention was given to designing the hardware and PCB to shorten customer investment in the homologation process.

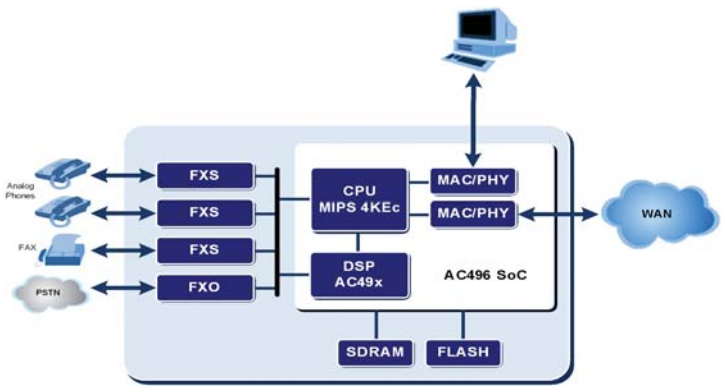

AC496 ATA Toolkit Hardware Design

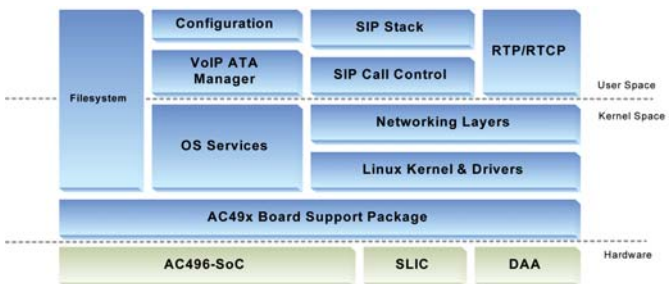

AC496 ATA Software Architecture

AC496 Tulip ATA key features

- Production Ready Analog Telephone Adapter (ATA) Reference Design
- Available as a module or through production license
- Data Routing Capabilities
- Minimizing risk and allowing quick time to market for ODMs and OEMs rolling out VoIP-based services

CPE VoIP Toolkit

- Combined hardware & software reference design for up to 4 compressed VoIP channels
- Ideal add-on VoIP solution for broadband access products such as FTTx, WiMAX, Cable, xDSL
- Superior voice quality at a competitive price
- Minimizing risks and allowing quick time to market for ODMs and OEMs rolling out VoIP-based services

Channel Density
- Up to 4 compressed VoIP channels

Media Processing
- Voice Coders - G.711, G.723.1, G.729A/B, G.726, G.722
- Fax – T.38 Relay, Bypass
- Echo Cancelation – G.168-2004 compliant, 32 msec tail length
- Voice Activity Detection (VAD)
- Comfort Noise Generation (CNG)

VoIP Signaling Protocols
- SIP - RFC 3261, 3262, 3263, 3264, 2327

Packetization
- RTP/RTCP Packetization – RFC 3550, 3551
- DTMF Relay - RFC 2833, RFC 4733

Telephony Signaling
- DTMF – Detection and Generation, TIA464B
- Caller ID – Telcordia/ETSI/NTT Type I/II (on hook/off hook)
- Programmable Call-Progress Tones

Telephony Support
- FXS and FXO supported

Telephony Features
- 3-Way conferencing (on both channels)
- Call Hold
- Call Transfer
- Call Waiting

Operating System
- Embedded Linux

The AC48x CPE VoIP Toolkit is a combined hardware and software VoIP reference design for up to 4 VoIP channels. This reference design can be used as an add-on VoIP module for CPE broadband products. Utilizing AudioCodes field-proven VoIPerfect™ software, the AC48x Voice over Packet Processor (VoPP) and the VoicePacketizer™ Voice over Streaming Protocol Stack, enables this reference design to offer manufacturers of broadband access products a cost-effective, high quality and market ready solution for the rapidly growing residential VoIP market. The AC48x CPE VoIP Toolkit hardware is based on the AC48x Voice over Packet Processor (VoPP) family offering a cost-effective Bill of Materials (BOM) that fully addresses the needs of aggressive market cost demands.The AC48x CPE VoIP Toolkit couples the hardware with complete Linux software available in source code.

Device	DSP Clock	Voice Ports
AC488	50 Mhz	2
AC483	100 Mhz	4

AC48x CPE VoIP Toolkit Hardware Design

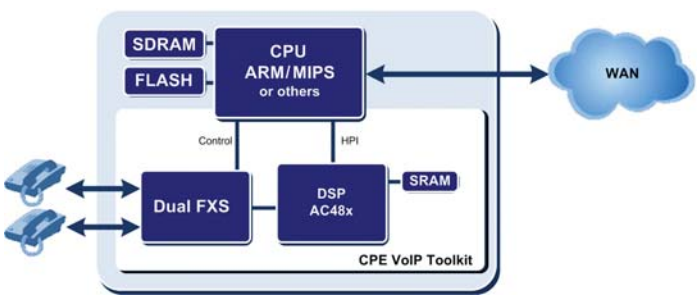

AC48x CPE VoIP Toolkit Software Architecture

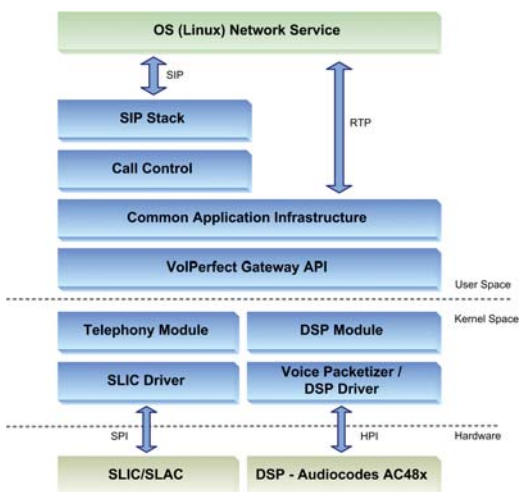

VoIP Enabled GPON ONU

The GPON CPE VoIP toolkit is a reference design targeted at the GPON CPE market. It is a fully featured, cost-effective VoIP enabled SFU reference design that enables OEMs and ODMs to develop GPON-ONT complying with ITU-T G.984.3. Designed by using a highly integrated ONT SoC device from Broadlight, based on a MIPS processor and AudioCodes AC48x CPE VoIP toolkit, this reference design provides Gigabit Ethernet and VoIP telephony interfaces on a cost-effective platform.

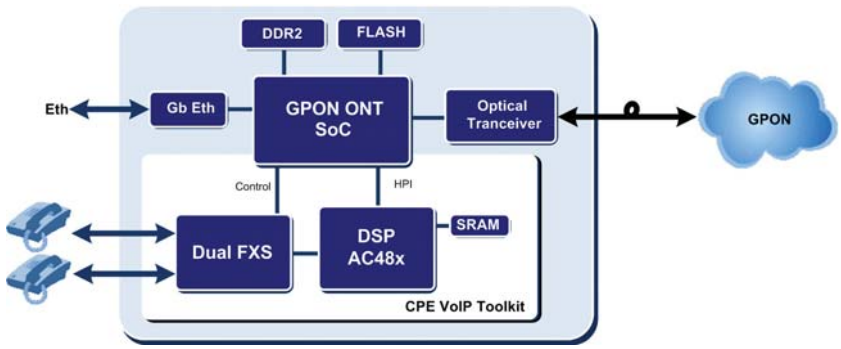

VoIP Enabled GPON ONU Hardware Design

VoIP Enabled EPON ONU

The EPON CPE VoIP toolkit is a reference design targeted at the EPON CPE market. It provides a fully functional Optical Network Unit designed for use in an IEEE 802.3ah Gigabit Ethernet Passive Optical Network (GE-PON). Designed by using a highly integrated third party ONU SoC device based on ARM9 and AudioCodes AC48x CPE VoIP toolkit, this reference design provides GE-PON protocol management, advanced classification engine, a 4 port Fast Ethernet switch and VoIP telephony interfaces on a cost-effective platform. The EPON CPE VoIP Toolkit is compliant with VoIP requirements for China Telecom Corporation (CTC).

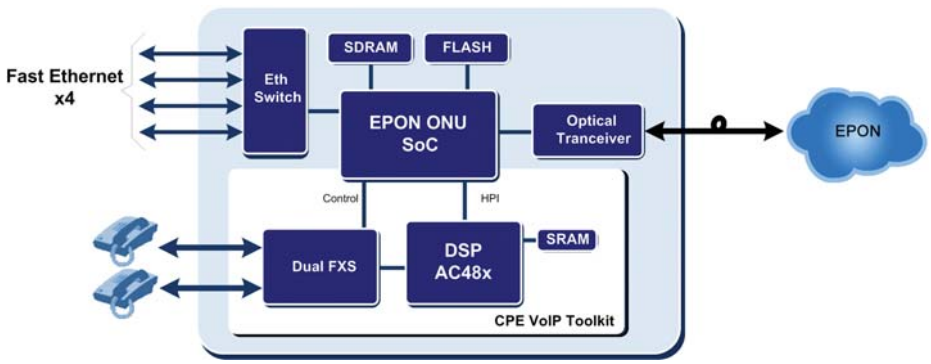

VoIP Enabled EPON ONU Hardware Design

VoIP Enabled WiMAX CPE

The WiMAX CPE VoIP toolkit is a reference design targeted at the WiMAX CPE market. It provides a fully functional WiMAX IEEE-802.16d/e broadband access device integrated with VoIP features. Designed by using the highly integrated third party WiMAX SoC device based on dual core ARM and AudioCodes AC48x CPE VoIP toolkit, this reference design provides WiMAX protocol management and a complete VoIP application on a cost-effective platform.

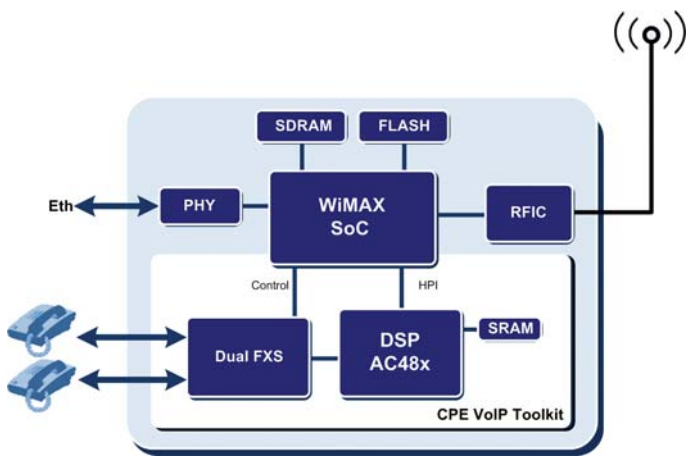

VoIP Enabled WiMax CPE Hardware Design

SMB VoIP Toolkit

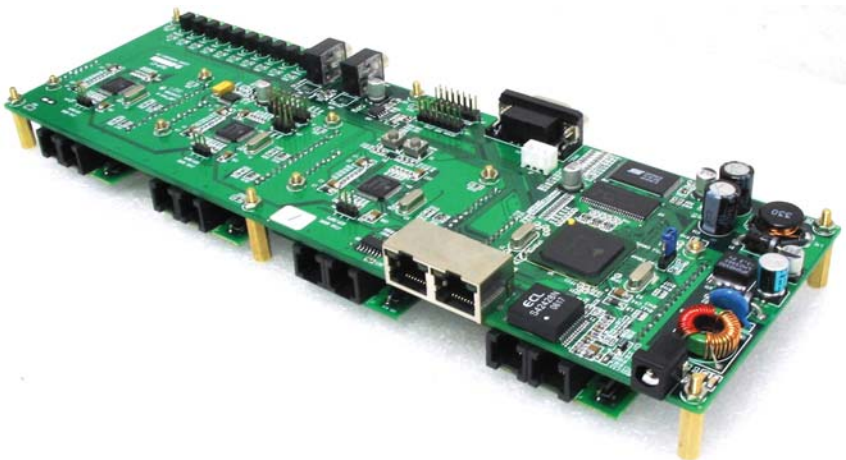

- Complete SMB VoIP Gateway Solution
- Up to 16 FXS/FXO lines at a competitive price
- Field-proven VoIP processors and software
- VoIPerfectHD™ (High Definition VoIP) support
- Ideal solution for SOHO & SMB VoIP applications that require superior voice quality, scalability and reliability with cost-effective deployment

The SMB VoIP Toolkit is a combined hardware and software reference design for VoIP gateways with up to 16 channels, providing a complete, cost-effective solution for various applications. Utilizing AudioCodes field-proven VoIPerfectHD™ architecture (High Definition VoIP) support, the AC494E System on Chip (SoC) and the AC498 DSP, allows this reference design to offer OEMs and ODMs a cost-effective and quick time to market solution for the rapidly growing SOHO and SMB VoIP markets.

AC494E SoC (System on Chip) and AC498

In a single chip, the AC494E combines the main components of a 4 VoIP channel gateway. It includes a MIPS 4KEC CPU, AC49x DSP and 2-port MACs/PHYs and a rich set of peripherals.

The AC498 DSP is an add-on DSP to the AC494E based on the AC49x DSP core. Each device provides extra 4 VoIP channels to the AC494E. Up to three AC498 devices can be concurrent with the AC494E providing a configurable VoIP density between 4 to 16 channels.

The AC494E and the AC498 are based on VoIPerfectHD™ architecture (High Definition VoIP) support, AudioCodes' underlying, best-of-breed, core media gateway technology for its product portfolio. Utilizing its highly integrated structure, requiring only aminimal number of peripheral devices, time-to-market is rapid with little risk.

Device	CPU Clock	DSP Clock	USB	Max VoIP Channels	Eth. Ports
AC494E	300 Mhz	150 Mhz	-	4	2
AC498	-	150 Mhz	-	4	-

Channel Density
- Up to 16 FXS/FXO lines

Hardware
- CPU – MIPS32 4KEC, 300 Mhz
- DSP – AC49x, 150 Mhz
- 2 Integrated 10/100/1000 Base-T MAC/PHY ports
- Integrated 3-port layer-2 Ethernet Switch
- Integrated SSP (SPI/I2C) Controller

Telephony Signaling
- DTMF – Detection and Generation, TIA464B
- Caller ID – Telcordia/ETSI/NTT Type I/II (on hook/off hook)
- Programmable Call-Progress Tones

Packetization
- RTP/RTCP Packetization – RFC 3550, 3551, 2198
- DTMF Relay - RFC 2833

Security
- SRTP (Secured RTP) per RFC 3711, 128 bit AES, HMAC SHA1

Telephony Support
- FXS and FXO supported

Media Processing
- Voice Coders - G.711, G.723.1, G.729A/B, G.726, GSM FR, iLBC
- Wideband Coders – G.722, G.722.2 (WB-AMR), G.711.1
- Fax – T.38 Relay, Bypass , T.38 over RTP
- Echo Cancelation – G.168-2004 compliant, 64 msec tail length
- Silence Suppression – VAD, CNG
- Adaptive Jitter Buffer 300 msec

Telephony Features
- N-Way conferencing
- Call Forward
- Call Hold
- Call Transfer
- Call Waiting

Data Protocols
- IPv4, TCP, UDP, ICMP, ARP
- PPPoE
- IEEE 802.1p/q QoS (VLAN tagging)
- Layer 2 switching
- DHCP Client/Server – RFC 2132

VoIP Signaling Protocols
- SIP - RFC 3261, 3262, 3263, 3264, 2327

Configuration/Management
- Embedded Web
- TFTP
- FTP
- Telnet
- Filesystem support

Operating System
- Linux Kernel
- Board Support Package

SMB VoIP Toolkit Reference Design

The SMB VoIP Toolkit is a combined hardware and software VoIP reference design for up to 16 analog channels. This reference design can be used as an infrastructure for SOHO/SMB VoIP products such as IP-PBX and Gateways. This reference design has a cost-effective Bill of Materials (BOM) that fully addresses the needs of aggressive market cost demands while significantly reduces the cost per channel while maintaining high quality and performance.

The scalability and flexibility of this reference design and its open source code software allows customers to rapidly customize and actively deploy a differentiated VoIP gateway product to any market.

The SMB VoIP Toolkit hardware platform includes a set of FXS and FXO devices together with LAN and WAN interfaces and all necessary developers' interfaces.

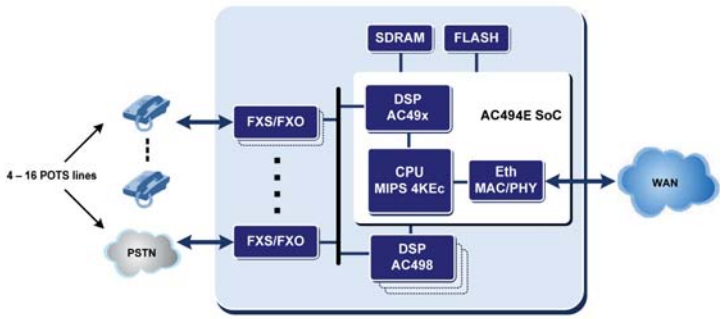

SMB VoIP Toolkit Hardware Design

Software Development Kit (SDK)

The SMB VoIP Toolkit couples the hardware with a complete Linux software suite supporting voice and network protocols, call features and management applications. This software is available in open source code allowing customers to easily differentiate themselves.

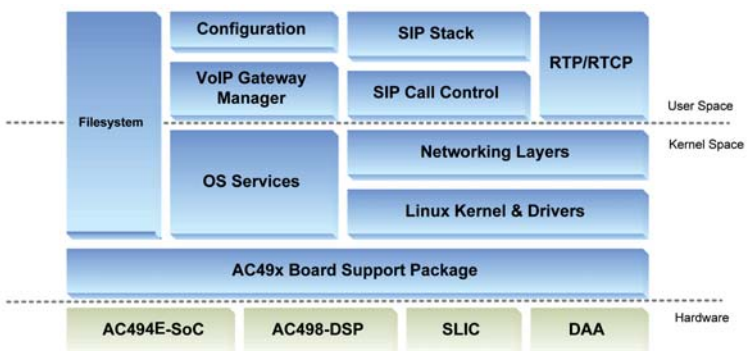

SMB VoIP Toolkit Software Architecture

Toolkit Contents

- Reference Design & Development Platform based on AC494E-SoC and AC498-DSP (up to 16 VoIP channels)
- FXS, FXO and BRI modules
- Linux Operating System (Kernel 2.6)
- Free Development Environment (Linux Tool-chain)
- Ready-to-use VoIP Gateway SIP Application (open source code)

RISC Free IP-PBX Toolkit Featuring Embedded Asterisk

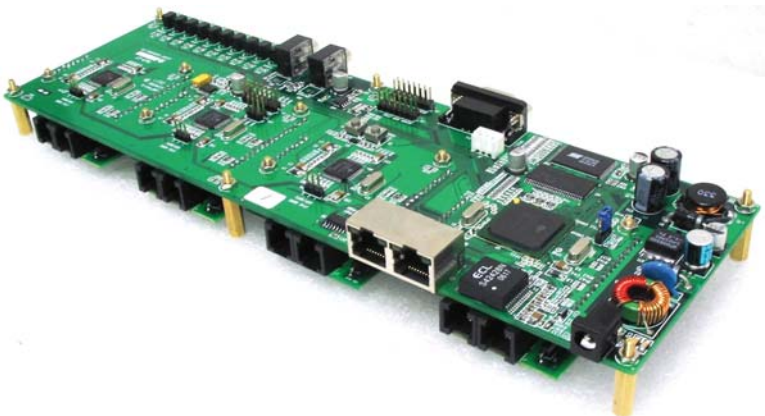

- IP-PBX reference platform integrated with Embedded Asterisk® and AudioCodes DSP
- Portable solution for other embedded platforms
- Up to 16 analog extension support
- Up to 32 IP Phones support
- Includes ready to use FXS, FXO and BRI interfaces
- Unique Asterisk Channel Driver suitable for AudioCodes AC49x-DSP devices
- Open Source Code & Development environment

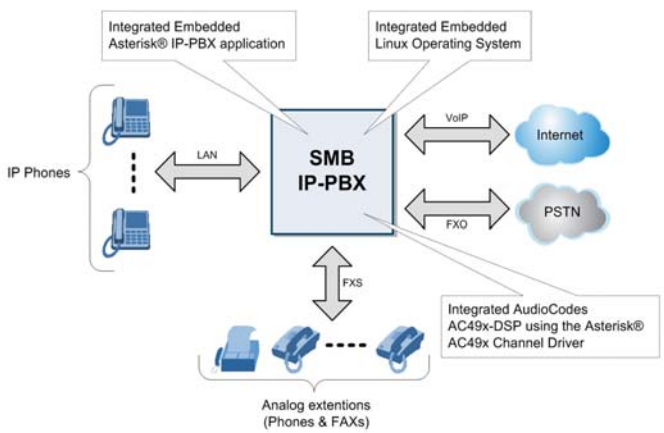

Asterisk® is a trademark of Digium, Inc.

The RISC Free IP-PBX Toolkit enables developers to benefit from the embedded Asterisk IP-PBX application while offloading the CPU from its load due to voice processing tasks, along with utilizing AudioCodes superior voice quality and enhanced features.

The RISC Free IP-PBX Toolkit is a combined hardware and software reference design for the IP-PBX with up to 16 analog channel support and up to 32 IP Phone support, providing a complete cost-effective solution for various applications. Utilizing AudioCodes field-proven VoIPerfectHD™ architecture (High Definition VoIP) support and the embedded Asterisk IP-PBX application, the AC494E System on Chip (SoC) and the AC498 DSP, allow this reference design to offer OEMs and ODMs a cost-effective and quick time-to-market solution for the rapidly growing SOHO and SMB VoIP markets.

AudioCodes' AC494E SoC (System on Chip), is a single, field-proven chip consisting of a complete 4 channel VoIP solution, integrated with superior voice quality at a competitive price. The AC498 DSP is an add-on 4 channel VoIP device for the AC494E. Up to three AC498 devices can be concurrent with the AC494E, providing a configurable VoIP density between 4 to 16 channels.

Infrastructure for IP-PBX systems including the hardware design & IP-PBX embedded Asterisk based sample application

For developers who would like to develop a complete IP-PBX based on AudioCodes AC494E device, using a ready-to-use hardware and software solution.

Development platform for embedded Asterisk integrated with AC49x-DSP

For developers that would like to use the AC49x-DSP with their Asterisk based products and any RISC CPU, using the Asterisk AC49x channel driver.

Asterisk AC49x Channel Driver

The Asterisk AC49x Channel Driver is an add-on software to the Asterisk application and connects it with AudioCodes AC49x devices. When using the AC49x Channel Driver, all the Codec Translators and RTP functions are handled by the AC49x DSP, which offloads the CPU and increases the utilization of the final product. The AC49x Channel Driver also supports various analog interfaces as part of the AC49x IP-PBX reference design including FXS, FXO and BRI modules.

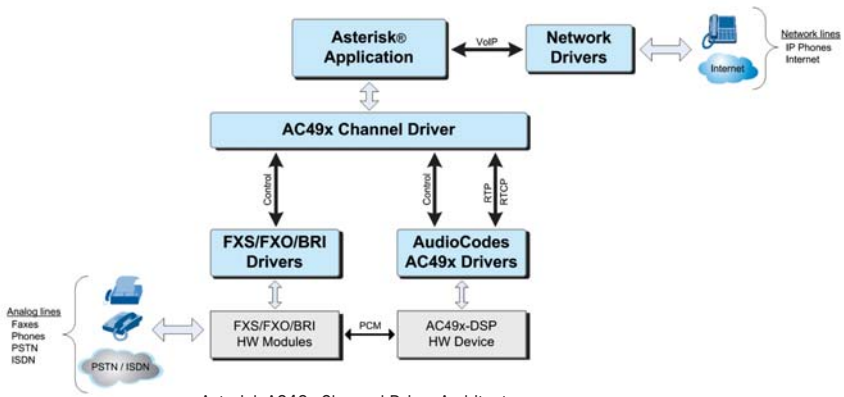

Asterisk AC49x Channel Driver Architecture

Toolkit Contents

- IP-PBX Development Platform based on AudioCodes SoC devices
- FXS, FXO and BRI modules
- Linux OS for MIPS (Kernel 2.6)
- Free Development Environment
- AC49x Channel Driver to be used with embedded Asterisk IP-PBX application (open source code)
- IP-PBX Asterisk based sample application

Key Features

- Integrated 300 MHz CPU for IP-PBX and Data applications
- Complex vocoders, wideband vocoders, and T.38 FAX support
- USB and SD storage support
- Scalable solution, several choices of AudioCodes DSPs with any RISC CPU
- Improved performance, offloading the CPU for more tasks

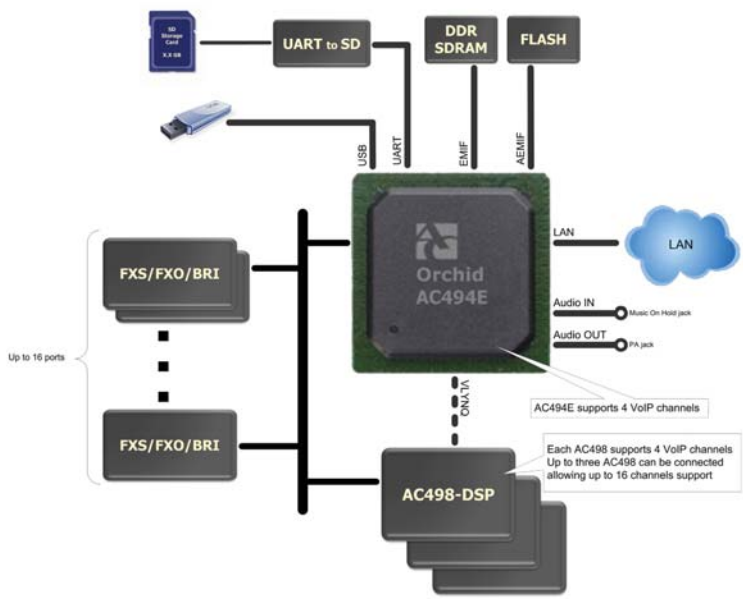

*IP-PBX Reference Design

AC48x VoIP DSP

- **Feature rich DSP for low density gateways with toll quality voice compression**
- **Independent multi-channel operation**
- **Pin compatible devices**

The AC48x is an ideal low cost voice processing engine for a variety of Voice over IP, Voice over DSL and other voice over packet client applications.The AC48x VoP processor is from one up to four ports voice over packet processor that combines toll quality low bit rate voice compression, T.38 compliant fax relay and other voice band processing functions. Field-proven, feature-rich software enables the rapid development and fast time-to-market of the complete solution.

The AC48x is supported by the VoicePacketizerTM software stack, which enables the processor to create a VoIP-compliant media stream as part of a client entity. VoicePacketizerTM is an ANSI-C operating system, independent software stack that supports the RTP/RTCP protocol. The software stack also provides a simple API for initialization and configuration of the AC48x and for run-time call control.

Channel Density
- AC488 1 or 2 Low Bit Rate channels
- AC483 4 channels Single LBR
- AC482 4 Low Bit rate channels

Data Functions
- Voice/Fax/Data - Automatic Detection and Switching
- Fax support – T.38 compliant G3 Fax Relay, 2.4-33.6 kbps or PCM bypass
- Modem support – Automatic switch to PCM for up to V.92 rates

Signaling
- Inband Signaling
  - DTMF TIA 464B
  - MF R1, R2
- Detection and Generation - User Defined Call Progress Tones
- Out of band signaling – CAS ABCD (From Standard Framers) Caller ID Detection and Generation
  - Telecordia (Bellcore) On Hook / Off Hook (Type 1 & 2)
  - ETSI Onhook and Offhook Service (Type 1 & 2)
  - NTT Number Display (Type 1), Name Display

Voice Functions
- Voice Coders
  - G.711 PCM (A / u-law) at 64 kbps
  - G.726 ADPCM at 16-40 kbps
  - G.727 E-ADPCM at 16-40 kbps
  - G.729AB CS-ACELP at 8kbps
  - G.723.1 MP-MLQ at 6.3 kbps
  - G.723.1 ACELP at 5.3 kbps
  - GSM 6.10 Full Rate at 13.2 kbps
  - G.722
- Echo Cancellation - G.168-2004 compliant, up to 64msec tail length 3-Way Conference - Conferencing of 3 participants from PSTN or IP Quality Enhancement - Voice Activity Detection (VAD)
  - Comfort Noise Generation (CNG)
  - Packet Loss Concealment (PLC)
  - Adaptive Jitter Buffer (up to 300 msec)
- IPmedia™ Features
  - Energy and Answer detectors
  - Packet to packet Transcoding

Packetization
- RTP/RTCP – RFC 3550, 3551, 2198
- DTMF Relay - RFC 2833

AC490 – VoIP DSP

SOHO / SMB VoIP Gateway

SMB IP-PBX

- Feature rich DSP for medium density gateways with superior voice quality
- Variety of vocoders for various VoIP applications
- No external memory required

The AC490xx family of DSPs is an ideal solution for Small Medium Business (SMB) VoIP gateways and IP-PBXs that have an existing CPU or network processor. Field-proven, feature rich software and a full reference design, enable the rapid development and quick time to market of the complete solution. The AC490xx is based on VoIPerfect™ architecture, AudioCodes' underlying, best-of-breed core media gateway technology.

E1 to VoIP sample application using the AC490

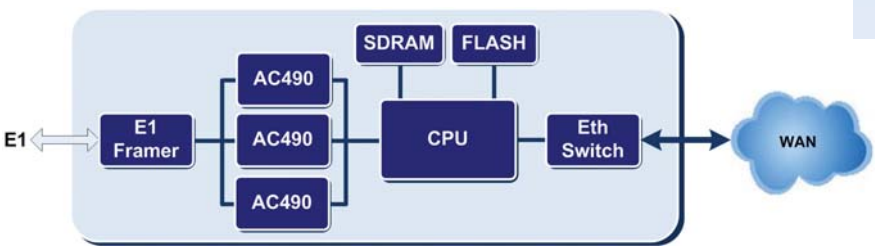

Channel Density
- AC49008 – Up to 8 compressed channels
- AC49012 – Up to 12 compressed channels
- AC49020 – Up to 20 uncompressed channels

Data Functions
- Voice/Fax/Data - Automatic Detection and Switching
- Fax support - T.38 compliant G3 Fax Relay, 2.4-14.4 kbps
  or PCM bypass
- Modem support – Automatic switch to PCM for up to V.92 rates

Signaling
- Inband Signaling - DTMF TIA 464B
  - MF R1,R2
- Detection and Generation - User Defined Call Progress Tones
- Out of band signaling – CAS ABCD (From Standard Framers)
- Caller ID Detection and Generation
  - Telecordia (Bellcore) On Hook/Off Hook (Type 1 & 2)
  - ETSI On Hook and Off Hook Service (Type 1 & 2)
  - NTT Number Display (Type 1), Name Display

Security
- SRTP (Secured RTP) per RFC 3711, 128 bit AES, HMAC SHA1

Host Services
- HDLC Framing - For CCS signaling (ISDN, V5.2)
  - MTP2 per Q.703

Software Functionalities
- System Features - Selection of vocoders on the fly for each channel
  - Dynamic packet size programming

Voice Functions
- Voice Coders - G.711 PCM (A/u-law) at 64 kbps
  - G.726 ADPCM at 16-40 kbps
  - G.727 E-ADPCM at 16-40 kbps
  - G.729AB CS-ACELP at 8kbps
  - G.723.1 MP-MLQ at 6.3 kbps
  - G.723.1 ACELP at 5.3 kbps
  - GSM 6.10 Full Rate at 13.2 kbps
  - G.729E at 11.8 kbps
  - AMR at 4.75-12.2 kbps
  - iLBC at 13.33 & 15.2 kbps
- Echo Cancelation - G.168-2004 compliant, 128 msec tail length
- 3-Way Conference - Conferencing of 3 participants from PSTN or IP
- Quality Enhancement - Voice Activity Detection (VAD)
  - Comfort Noise Generation (CNG)
  - Packet Loss Concealment (PLC)
  - Adaptive Jitter Buffer (up to 300 msec)
- IPmedia™ Features - Automatic Gain Control
  - Energy and Answer detectors
  - Packet-to-packet Transcoding

Packetization
- RTP/RTCP – RFC 3550, 3551, 2198
- DTMF Relay - RFC 2833

AC501x – VoIP DSP

SOHO / SMB VoIP Gateway

SMB IP-PBX

- Feature rich DSP with superior voice quality
- Variety of vocoders for various VoIP applications
- Offers excellent VoIP add-ons for designs with Stand Alone CPU
- Off loading the CPU with MII/RMII interfaces
- Pin Compatible Devices

The AC501x family of DSPs is an ideal solution for GPON MDUs, Small Medium Business (SMB) VoIP gateways and IP-PBXs that have a standalone CPU or network processor. Field-proven, feature rich software, and advanced HW architecture that contains MII/RMII interfaces for off loading the CPU, enable the rapid development and fast time to market of the complete solution. The AC501x is based on VoIPerfect™ architecture, AudioCodes' underlying best-of-breed core media gateway technology.

Device	Compressed Channels	HPI	RMII/MII	Ext. Memory
AC5011	8	V	V	DDR2
AC5012	16	V	V	DDR2
AC5013	20	V	V	DDR2
AC5014	24	V	V	DDR2

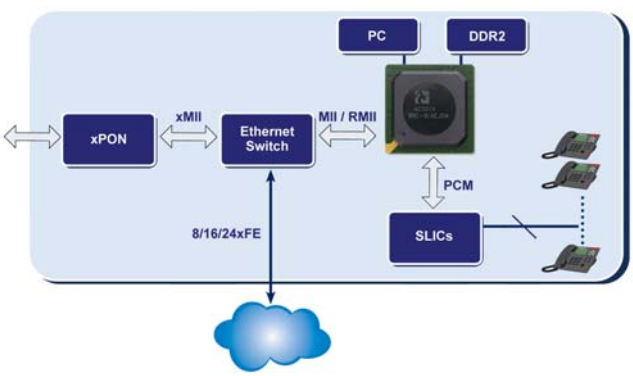

PON MDU sample application using AC501x

Channel Density
- Up to 8/16/20/24 compressed channels

Data Functions
- Voice/Fax/Data - Automatic Detection and Switching
- Fax support – T.38 compliant G3 Fax Relay, 2.4-33.6 kbps or PCM bypass
- Modem support - Automatic switch to PCM for up to V.92 rates

Signaling
- Inband Signaling - DTMF TIA 464B
  - MF R1,R2
- Detection and Generation - User Defined Call Progress Tones
- Out of band signaling – CAS ABCD (From Standard Framers)
- Caller ID Detection and Generation
  - Telecordia (Bellcore) On Hook/Off Hook (Type 1 & 2)
  - ETSI On Hook and Off Hook Service (Type 1 & 2)
  - NTT Number Display (Type 1), Name Display

Security
- SRTP (Secured RTP) per RFC 3711, 128 bit AES, HMAC SHA1

Voice Functions
- Voice Coders –
  - G.711 PCM (A / u-law) at 64 kbps
  - G.726 ADPCM at 32 kbps
  - G.729AB CS-ACELP at 8kbps
  - G.723.1 MP-MLQ at 6.3 kbps
  - G.723.1 ACELP at 5.3 kbps
  - G.722
  - G.722.2 WB-AMR
  - AMR
- Echo Cancellation - G.168-2004 compliant, 128 msec tail length
- N Way Conference - Conferencing of N participants from PSNT or IP
- Quality Enhancement - Voice Activity Detection (VAD)
  - Comfort Noise Generation (CNG)
  - Packet Loss Concealment (PLC)
  - Adaptive Jitter Buffer (up to 300 msec)
- IPmedia™ Features* - Automatic Gain Control
  - Energy and Answer detectors
  - Packet to packet Transcoding

Packetization
- RTP/RTCP – RFC 3550, 3551, 2198
- DTMF Relay - RFC 4733, 2833

Enterprise VoIP Gateway

AC491 / AC491L

- **Feature rich DSP for enterprise gateways with superior voice quality**
- **Variety of vocoders for various VoIP applications**
- **No external memory required**

The AC491/AC491L family of DSPs is an ideal solution for enterprise VoIP gateways - digital and analog. Featuring high channel density (up to 192 channels of non-compressed voice, or 96 channels of compressed voice), low power consumption (less than 6mW/ch for non-compressed voice), and low footprint (16x16 mm) with no external memory, the AC491/AC491L provides an ideal building block for enterprise gateways and IP-PBXs. The AC491/AC491L is based on VoIPerfect™ architecture, AudioCodes' underlying, best-of-breed core media gateway technology.

E1 x 4 to VoIP sample application using the AC491

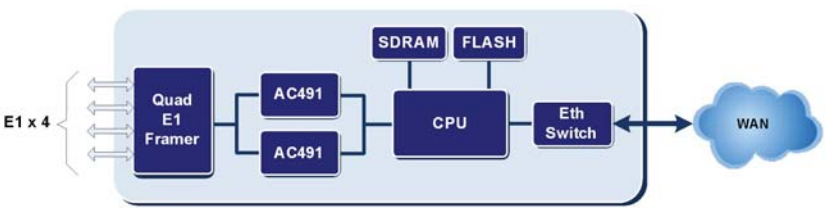

E1 VoIP sample application using the AC491L

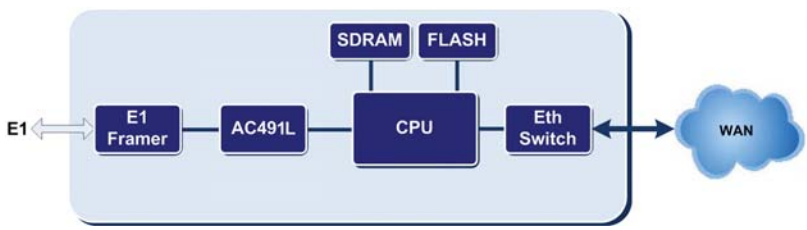

Channel Density
- AC491L30 – Up to 32 compressed channels
- AC491064 – Up to 64 compressed channels
- AC491096 – Up to 96 compressed channels
- AC491192 – Up to 192 uncompressed channels

Data Functions
- Voice/Fax/Data - Automatic Detection and Switching
- Fax support – T.38 compliant G3 Fax Relay, 2.4-14.4 kbps or PCM bypass
- Modem support – Automatic switch to PCM for up to V.92 rates

Signaling
- Inband Signaling - DTMF TIA 464B
  - MF R1,R2
- Detection and Generation - User Defined Call Progress Tones
- Out of band signaling – CAS ABCD (from Standard Framers)
- Caller ID Detection and Generation
  - Telecordia (Bellcore) On
  - On Hook/Off Hook (Type 1 & 2)
  - ETSI On Hook and Off Hook Service (Type 1 & 2)
  - NTT Number Display (Type 1), Name Display

Security
- SRTP (Secured RTP) per RFC 3711, 128 bit AES, HMAC SHA1

Host Services
- HDLC Framing - For CCS signaling (ISDN, V5.2)
  - MTP2 per Q.703

Software Functionalities
- System Features - Selection of vocoders on the fly for each channel
  - Dynamic packet size programming

Voice Functions
- Voice Coders - G.711 PCM (A / u-law) at 64 kbps
  - G.726 ADPCM at 16-40 kbps
  - G.727 E-ADPCM at 16-40 kbps
  - G.729AB CS-ACELP at 8kbps
  - G.723.1 MP-MLQ at 6.3 kbps
  - G.723.1 ACELP at 5.3 kbps
  - GSM 6.10 Full Rate at 13.2 kbps
  - G.729E at 11.8 kbps
  - AMR at 4.75-12.2 kbps
  - iLBC at 13.33 & 15.2 kbps
  - EVRC Up to 8.55 kbps
  - G.722
  - G.722.2 WB-AMR
- Echo Cancelation - G.168-2004 compliant, 128 msec tail length
- 3-Way Conference - Conferencing of 3 participants from PSTN or IP
- Quality Enhancement - Voice Activity Detection (VAD)
  - Comfort Noise Generation (CNG)
  - Packet Loss Concealment (PLC)
  - Adaptive Jitter Buffer (up to 300 msec)
- IPmedia™ Features - Automatic Gain Control
  - Energy and Answer detectors
  - Packet-to-packet Transcoding

Packetization
- RTP/RTCP - RFC 3550, 3551, 2198
- DTMF Relay - RFC 2833

HD VoIP Sounds Better

Enterprise VoIP Gateway

AC503x – VoIP DSP

- Feature rich DSP with superior voice quality
- Variety of vocoders for various VoIP applications
- Offers excellent VoIP add-ons for designs with Stand Alone CPU
- Off loading the CPU with RGMII/GMII interfaces
- Pin Compatible Devices

The AC503x family of DSPs is an ideal solution for Enterprise VoIP gateways and IP-PBXs that have an stand alone CPU or network processor. Field-proven, feature rich software, and advanced HW architecture that contains RGMII/GMII interfaces for off loading the CPU, enable the rapid development and fast time to market of the complete solution. The AC503x is based on VoIPerfect™ architecture, AudioCodes' underlying, best-of-breed core media gateway technology.

Device	VoIP Channels
AC5033	128
AC5037	240*
AC5039	256*

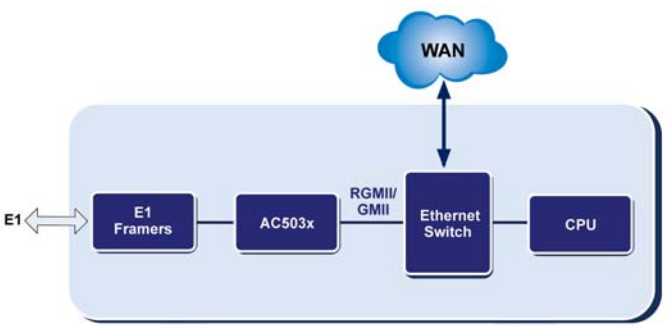

Channel Density
- Up to 128/240*/256* compressed channels

Data Functions
- Voice/Fax/Data - Automatic Detection and Switching
- Fax support – T.38 compliant G3 Fax Relay, 2.4-33.6 kbps or PCM bypass
- Modem support - Automatic switch to PCM for up to V.92 rates

Signaling
- Inband Signaling - DTMF TIA 464B
  - MF R1,R2
- Detection and Generation - User Defined Call Progress Tones
- Out of band signaling – CAS ABCD (From Standard Framers)
- Caller ID Detection and Generation
  - Telecordia (Bellcore) On Hook/Off Hook (Type 1 & 2)
  - ETSI On Hook and Off Hook Service (Type 1 & 2)
  - NTT Number Display (Type 1), Name Display

Security
- SRTP (Secured RTP) per RFC 3711, 128 bit AES, HMAC SHA1

Voice Functions
- Voice Coders –
  - G.711 PCM (A / u-law) at 64 kbps
  - G.726 ADPCM at 16-40 kbps
  - G.727 E-ADPCM at 16-40 kbps
  - G.729AB CS-ACELP at 8kbps
  - G.723.1 MP-MLQ at 6.3 kbps
  - G.723.1 ACELP at 5.3 kbps
  - GSM 6.10 Full Rate at 13.2 kbps
  - AMR at 4.75-12.2 kbps
  - iLBC at 13.33 & 15.2 kbps
  - EVRC Up to 8.55 kbps
  - G.722
  - G.722.2 WB-AMR
- Echo Cancellation - G.168-2004 compliant, 128 msec tail length
- N Way Conference - Conferencing of N participants from PSNT or IP
- Quality Enhancement - Voice Activity Detection (VAD)
  - Comfort Noise Generation (CNG)
  - Packet Loss Concealment (PLC)
  - Adaptive Jitter Buffer (up to 300 msec)
- IPmedia™ Features - Automatic Gain Control
  - Energy and Answer detectors
  - Packet to packet Transcoding

Packetization
- RTP/RTCP – RFC 3550, 3551, 2198
- DTMF Relay - RFC 2833, 4733

** Road Map*

Please contact AudioCodes representative for specific software availability and channel density support

VoIPerfect™ on a MIPS32® 24KE/34K, CEVA TeakLite-II and ARM11

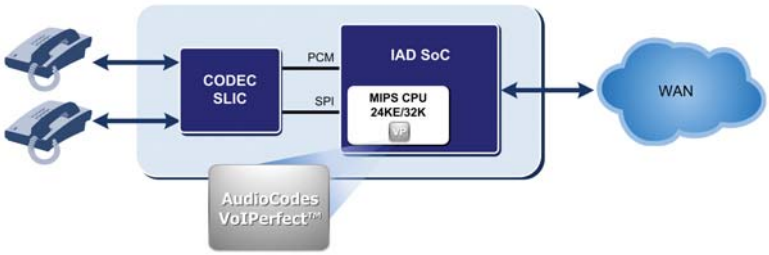

- AudioCodes field-proven VoIPerfect™ DSP Software optimized for MIPS 24KE, MIPS 34K, CEVA TeakLite-II and ARM11 RISC cores
- Featuring AudioCodes' certified and interoperable VoIPerfect™ SIP application
- Ideal VoIP solution for broadband CPEs such as EPON/GPON ONU, WiMAX CPE, xDSL Residential Gateways and Cable Set-top box
- Complete VoIP application minimizes efforts and risks to ODMs and OEMs rolling out VoIP products

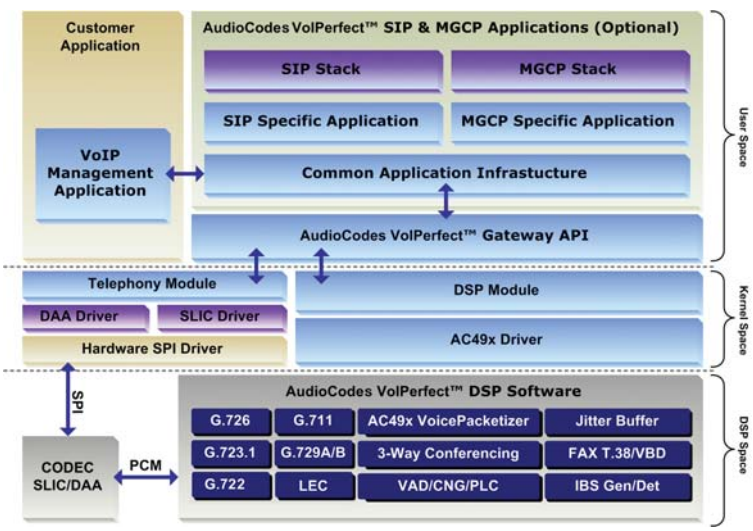

VoIPerfect™ Software Architecture

Channel Density
- Up to 4 compressed channels[1]

Media Processing
- Voice Coders: G.711, G.729A/B, G.723.1, G.726
- Wideband Coder: G.722
- 3-Way Conference: Up to 4 independent 3-Way conferences [1]
- Fax Support: T.38 compliant G3 Fax Relay, Bypass
- Echo Cancelation: G.168-2004 compliant, 32 msec tail length
- Quality Enhancement:
  - VAD - Voice Activity Detection
  - CNG - Comfort Noise Generation
  - PLC - Packet Loss Concealment
  - Adaptive Jitter Buffer, up to 300 msec with re-ordering
  - Configurable Digital Gain

Telephony Signaling
- Programmable Call-Progress Tones Detection and Generation
- DTMF Detection and Generation
- Caller ID Detection and Generation (On Hook & Off Hook):
  - Telcordia (Type 1 and 2)
  - ETSI (ETS 300 659-1 and 2)
  - NTT (Type 1 and 2)

Packetization
- RTP/RTCP Packetization: RFC 3550, 3551
- RTP Redundancy: RFC 2198
- DTMF Relay: RFC 2833, RFC 4733
- RTCP XR: RFC 3611 (optional)

VoIP Signaling Protocols
- SIP: RFC 3261, 3262, 3264, 2327, 2976
- MGCP: RFC 2705, 3435, 2327

Telephony Support
- FXS analog interface

Telephony Features
- 3-Way conference
- Call Forward
- Call Hold
- Call Transfer
- Call Waiting

Operating System
- Embedded Linux, Linux SMTC

1 Subject to specific clock speeds and available resources
Please contact AudioCodes for specific feature availability

AudioCodes HD VoIP

HDVoIP refers to the use of wideband technology, providing deeper clarity and a better audio experience in VoIP Communications. The traditional Public Switch Telephony Network (PSTN) is limited to 300-3400 Hz for narrowband voice. Voice signals are sampled at a rate of 8 kHz, causing limitations in communication quality and comprehension. In HD VoIP, wideband telephony refers to transmitting voice signals with bandwidths ranging between 50-7000 Hz and a sampling rate of 16 kHz. This effectively doubles the narrowband voice signal bandwidth and offers the caller "true voice" conversation. Compared to narrowband telephony, wideband technology establishes a sense of presence, resulting in a natural and comfortable conversation.

About AudioCodes

AudioCodes Ltd. (NasdaqGS: AUDC) designs, develops and sells advanced Voice over IP (VoIP) and converged VoIP and Data networking products and applications to Service Providers and Enterprises. AudioCodes is a VoIP technology market leader focused on converged VoIP & data communications and its products are deployed globally in Broadband, Mobile, Cable, and Enterprise networks. The company provides a range of innovative, cost-effective products including Media Gateways, Multi-Service Business Gateways, Session Border Controllers (SBC), Residential Gateways, IP Phones, Media Servers and Value Added Applications. AudioCodes' underlying technology, VoIPerfectHD™, relies on AudioCodes' leadership in DSP, voice coding and voice processing technologies. AudioCodes High Definition (HD) VoIP technologies and products provide enhanced intelligibility and a better end user communication experience in Voice communications.

International Headquarters
1 Hayarden Street, Airport City
Lod, Israel 70151
Tel: +972-3-976-4000
Fax: +972-3-976-4040

AudioCodes Inc.
27 World's Fair Drive,
Somerset, NJ 08873
Tel:+1-732-469-0880
Fax:+1-732-496-2298

Contact us: www.audiocodes.com/info

Website: www.audiocodes.com

©2010 AudioCodes Ltd. All rights reserved. AudioCodes, AC, AudioCoded, Ardito, CTI2, CTI², CTI Squared, HD VoIP, HD VoIP Sounds Better, InTouch, IPmedia, Mediant, MediaPack, NetCoder, Netrake, Nuera, Open Solutions Network, OSN, Stretto, TrunkPack, VMAS, VoicePacketizer, VoIPerfect, VoIPerfectHD, What's Inside Matters, Your Gateway To VoIP and 3GX are trademarks or registered trademarks of AudioCodes Limited. All other products or trademarks are property of their respective owners. Product specifications are subject to change without notice.

Ref. # LTRM-10019 01/11 V. 07

AudioCodes

HD VoIP Sounds Better